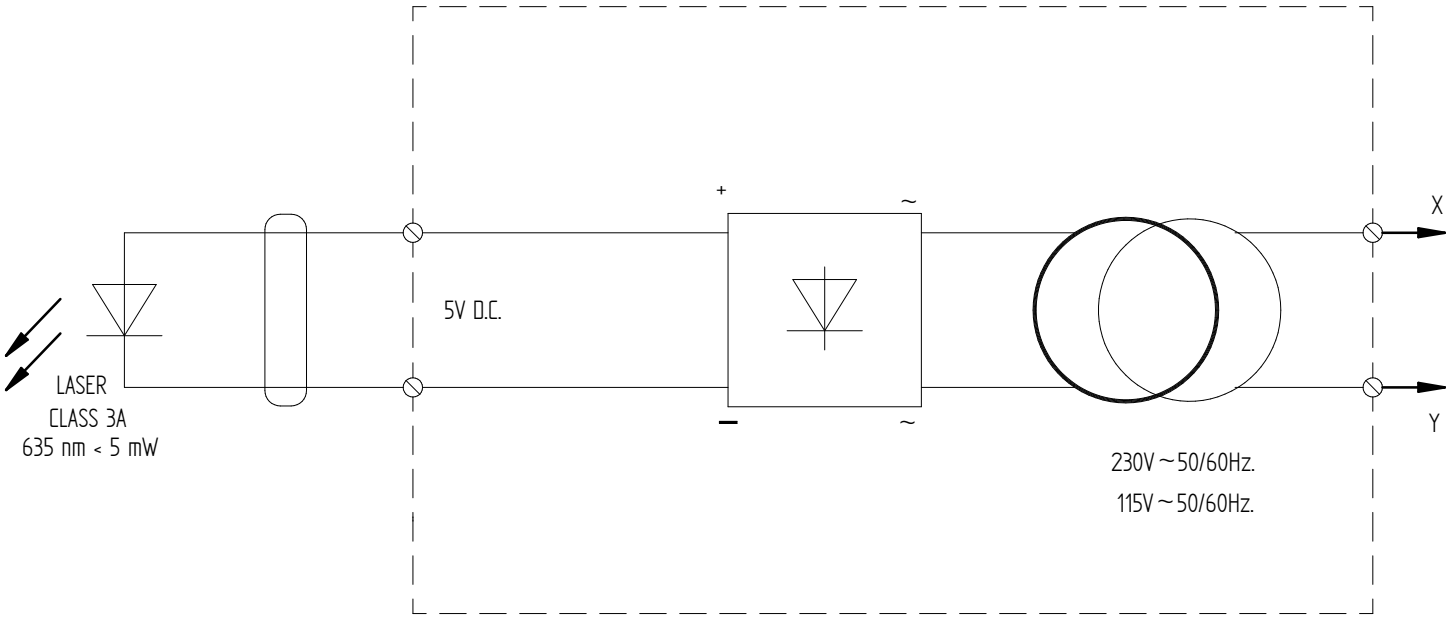

05 SP65020/1100A (850S–1050S) (115V ~ 50/60Hz.)
SP65020/1100 (850S–1050S) (230V ~ 50/60Hz.)
SP65020/1350A (1300S) (115V ~ 50/60Hz.)
SP65020/1350 (1300S) (230V ~ 50/60Hz.)

M4x20
M4
04 – SP90137
RED (+)
BLACK (–)
02 – SP70068
02 – SP70068
02 – SP70068
06– SP90079
B
(+)
(–)
M3x8
03 – SP65003
02 – SP70068
02 – SP70068
09 – SP90059
07 SP90138P (230V ~ 50/60Hz.)
SP90138P/A (115V ~ 50/60Hz.)
C
08 SP90244 (230V~50/60Hz.)
SP90243 (115V~50/60Hz.)
02 – SP70068
02 – SP70068
01– SP65008
X

sp_v4

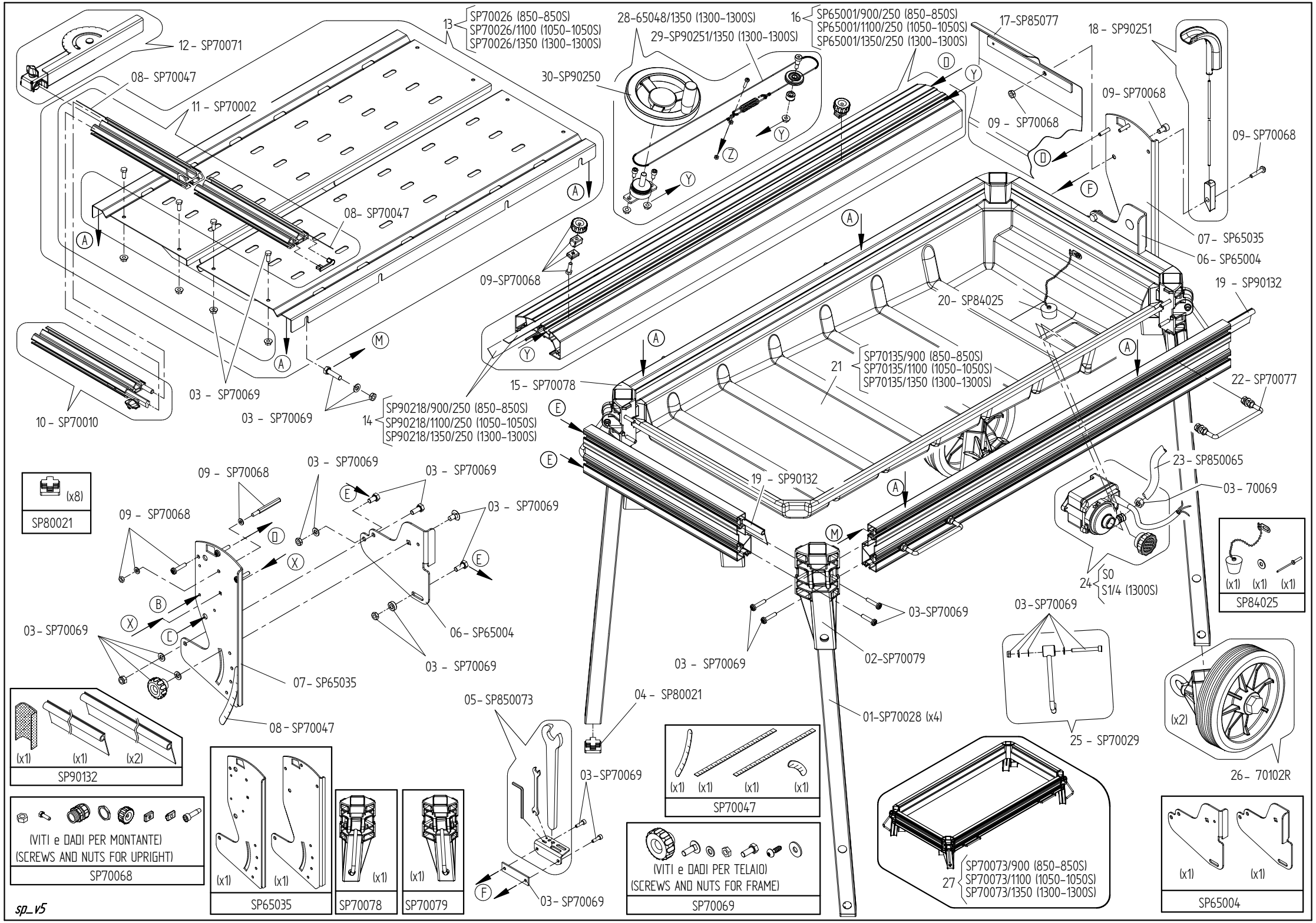
12 - SP70071
08- SP70047
11 - SP70002
13 SP70026 (850-850S)
SP70026/1100 (1050-1050S)
SP70026/1350 (1300-1300S)
28-65048/1350 (1300-1300S)
29-SP90251/1350 (1300-1300S)
30-SP90250
16 SP65001/900/250 (850-850S)
SP65001/1100/250 (1050-1050S)
SP65001/1350/250 (1300-1300S)
17-SP85077
18 - SP90251
09- SP70068
09 - SP70068
09- SP70068
08- SP70047
09-SP70068
07- SP65035
06- SP65004
19 - SP90132
20- SP84025
21 SP70135/900 (850-850S)
SP70135/1100 (1050-1050S)
SP70135/1350 (1300-1300S)
22- SP70077
03 - SP70069
03 - SP70069
10 - SP70010
14 SP90218/900/250 (850-850S)
SP90218/1100/250 (1050-1050S)
SP90218/1350/250 (1300-1300S)
15 - SP70078
19 - SP90132
23 - SP850065
03 - 70069
(x8)
SP80021
09 - SP70068
03 - SP70069
03 - SP70069
09 - SP70068
03 - SP70069
06- SP65004
03 - SP70069
03 - SP70069
07- SP65035
08 - SP70047
24 S0
S1/4 (1300S)
(x1) (x1) (x1)
SP84025
03-SP70069
03-SP70069
03 - SP70069
02-SP70079
01-SP70028 (x4)
25 - SP70029
(x2)
26- 70102R
05- SP850073
04 - SP80021
03-SP70069
03- SP70069
(x1) (x1) (x2)
SP90132
(x1) (x1) (x1) (x1)
SP70047
(VITI e DADI PER MONTANTE)
(SCREWS AND NUTS FOR UPRIGHT)
SP70068
(x1) (x1)
SP65035
(x1)
SP70078
(x1)
SP70079
(VITI e DADI PER TELAIO)
(SCREWS AND NUTS FOR FRAME)
SP70069
27 SP70073/900 (850-850S)
SP70073/1100 (1050-1050S)
SP70073/1350 (1300-1300S)
(x1) (x1)
SP65004
sp_v5

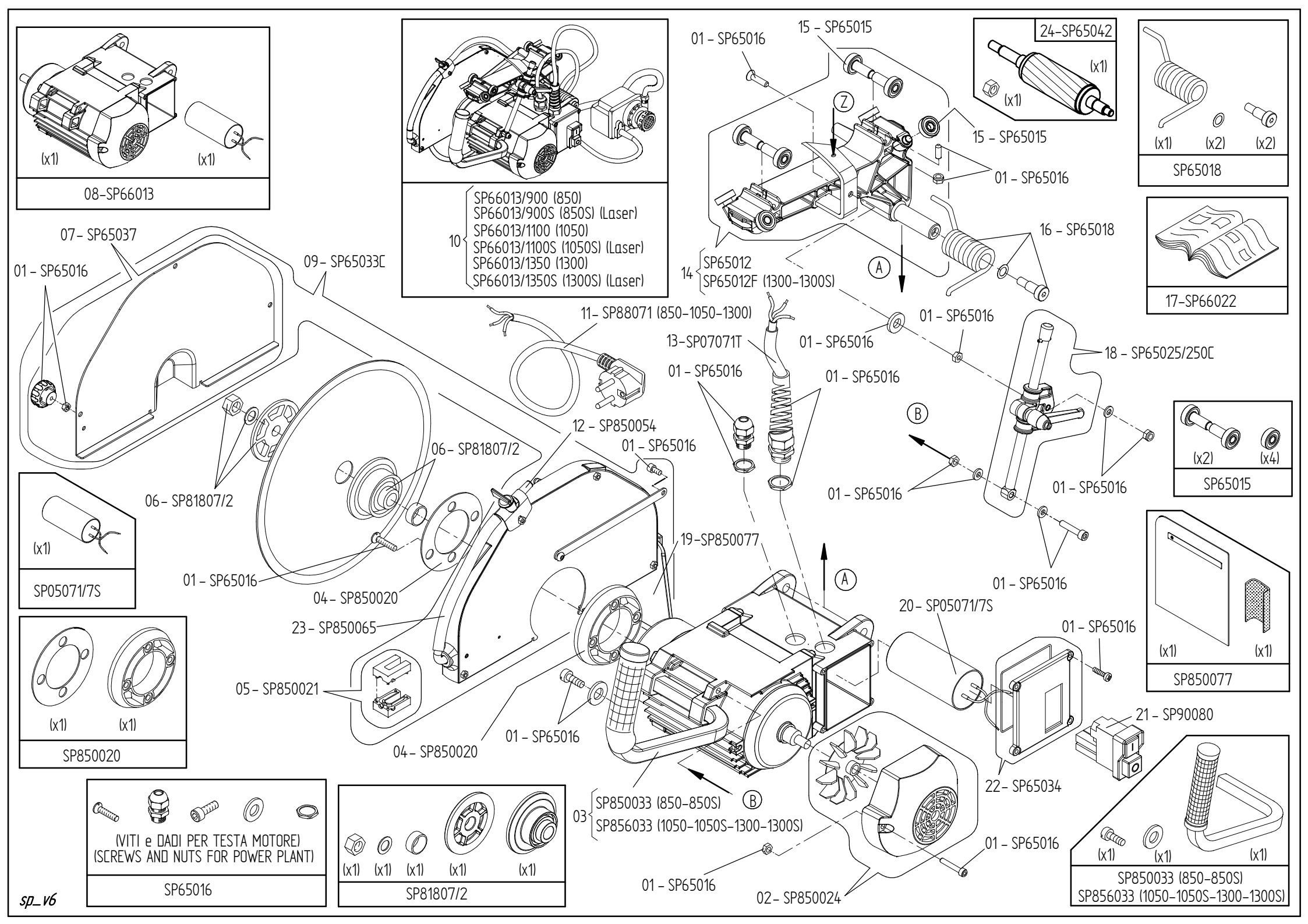
08-SP66013
(x1)
(x1)
10
SP66013/900 (850)
SP66013/900S (850S) (Laser)
SP66013/1100 (1050)
SP66013/1100S (1050S) (Laser)
SP66013/1350 (1300)
SP66013/1350S (1300S) (Laser)
01 - SP65016
15 - SP65015
Z
15 - SP65015
01 - SP65016
24-SP65042
(x1)
(x1)
(x1)
(x2)
(x2)
SP65018
16 - SP65018
17-SP66022
14
SP65012
SP65012F (1300-1300S)
A
01 - SP65016
01 - SP65016
18 - SP65025/250C
07 - SP65037
01 - SP65016
09 - SP65033C
11- SP88071 (850-1050-1300)
13-SP07071T
01 - SP65016
01 - SP65016
B
(x2)
(x4)
SP65015
12 - SP850054
01 - SP65016
06 - SP81807/2
06 - SP81807/2
01 - SP65016
01 - SP65016
(x1)
SP05071/7S
19-SP850077
A
01 - SP65016
01 - SP65016
04 - SP850020
20 - SP05071/7S
23 - SP850065
01 - SP65016
(x1)
(x1)
SP850077
05 - SP850021
(x1)
(x1)
SP850020
01 - SP65016
04 - SP850020
21 - SP90080
22 - SP65034
03
SP850033 (850-850S)
SP856033 (1050-1050S-1300-1300S)
B
01 - SP65016
01 - SP65016
02 - SP850024
(VITI e DADI PER TESTA MOTORE)
(SCREWS AND NUTS FOR POWER PLANT)
SP65016
(x1)
(x1)
(x1)
(x1)
(x1)
SP81807/2
(x1)
(x1)
(x1)
SP850033 (850-850S)
SP856033 (1050-1050S-1300-1300S)
sp_v6